Line Lights with Fresnel Lens

This line light series is designed for line scan camera applications. It produces a very thin light beam of 4 mm width.

The working distance is 40 mm. The light lengths range from 58 to 788 mm. Custom lengths on request.



Picture shows with extra bracket

Mechanical Dimensions

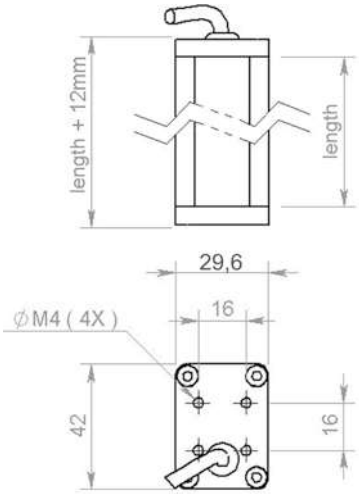

Step files available on request

Colour Information		
Replace "X" in order number by one character[1]	Colour	Wavelength (nm)
H	Red	617
W	White	
R	IR	850
B	Blue	469
G	Green	525
U	UV	395

[1] Example for red line light; SAH4 6058
Order example with 5 m cable; SAH4 6058/5

Order Information			
Order number	Length (mm)	Controller	
		continuous mode	strobe mode
SAX4 6058	58	1A	8A
SAX4 6097	97	1A	8A
SAX4 6135	135	1A	8A
SAX4 6173	173	1A	8A
SAX4 6212	212	1A	8A
SAX4 6250	250	1A	8A
SAX4 6289	289	1A	8A
SAX4 6327	327	1A	8A
SAX4 6365	365	1A	8A
SAX4 6404	404	1A	8A
SAX4 6442	442	1A	8A
SAX4 6481	481	1A	8A
SAX4 6519	519	3A	24A
SAX4 6557	557	3A	24A
SAX4 6596	596	3A	24A
SAX4 6634	634	3A	24A
SAX4 6673	673	3A	24A
SAX4 6711	711	3A	24A
SAX4 6749	749	3A	24A
SAX4 6788	788	3A	24A

Options

Cable length (1 meter included)
Bracket

© 2023 LMA Led Array Technology AB