Dark Field Lights

Dark field lights are ideal for detecting edges and contours.
The standard light beam angle is 10°.

The dark field lights have a diffuser for better evenness of illumination.

Bracket LAD3 4011 is included.



Mechanical Dimensions

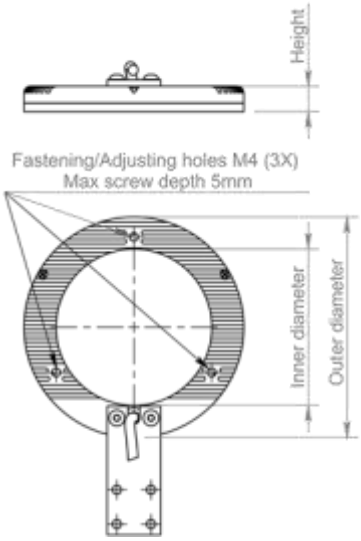

Step files available on request

Order Information						
Order number	Sizes (mm)			Light beam angle	Controller	
	outer ø	Inner ø	hight		continuous mode	strobe mode
PAD3 4025[2,4]	25	15	9,5	5º	1A	8A
SAX3 4072	72	42	12	10º	1A	8A
SAX3 4103	103	73	12	10º	1A	8A
SAX3 4166	166	136	12	10º	1A	8A
SAX3 4213	213	183	12	10º	1A 3A[3]	8A 24A[3]
SAX3 4276	276	246	12	10º	1A 3A[3]	8A 24A[3]

[2]Avaliable only in red light colour
[3]For light colour white, blue, green and UV
[4]Screw-in depth (M1,6) max 2mm

Colour Information		
Replace “X” in order number by one character[1]	Colour	Wavelength (nm)
H	Red	617
W	White	
R	IR	850
B	Blue	469
G	Green	525
U	UV	395

[1]Example for red dark field light: SAH3 4072

Options

Cable length (1 meter included)
Custom light beam angle

© 2023 LMA Led Array Technology AB