Ring Lights with 50° Light Beam Angle

These ring lights are characterized by a 50-degree inward aligned light output which places them between conventional ring lights and dark field lights.

This kind of illumination is used for example for shadow-free lighting of conic objects. Bracket is included (no. SXX3 010213).



Picture shows with extra bracket

Mechanical Dimensions

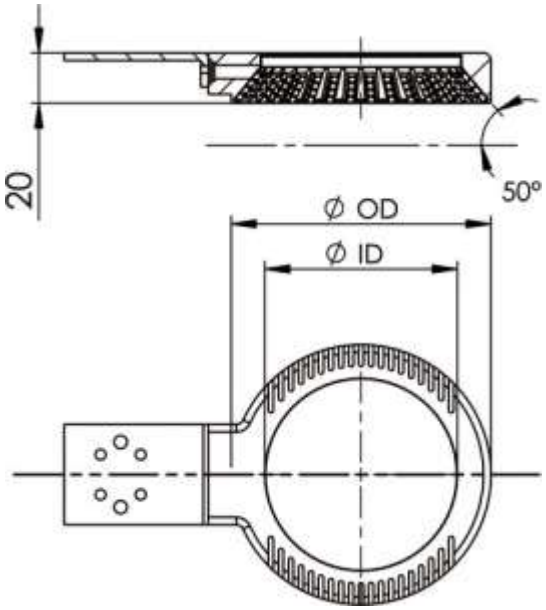

Step files available on request

Order Information				
Order number	Sizes (mm)		Controller	
	outer ø	inner ø	continuous mode	strobe mode
SAX3 3104(50)	104	76	1A	8A
SAX3 3184(50)	184	157	3A	24A

Colour Information		
Replace “X” in order number by one character[1]	Colour	Wavelength (nm)
H	Red	617
W	White	

[1]Example for red ring light: SAH3 3104(50)

Options

Cable length (1 meter included)
Diffuser
A clear diffuser to protect the LEDs is also available

© 2023 LMA Led Array Technology AB