Dome Lights

The dome lights are available in a wide range of sizes.

Dome lights provide highly shadow-free lighting in small working distances and avoid reflection from reflective objects mora than ring lights.

To prevent a camera hole shadow, it is possible to use a coaxial light together with the dome light.

Bracket are included (no. SXX3 010213, except for SAX3 2044)



SAX3 2044, 2078



SAX3 2102 - 2348

Mechanical Dimensions

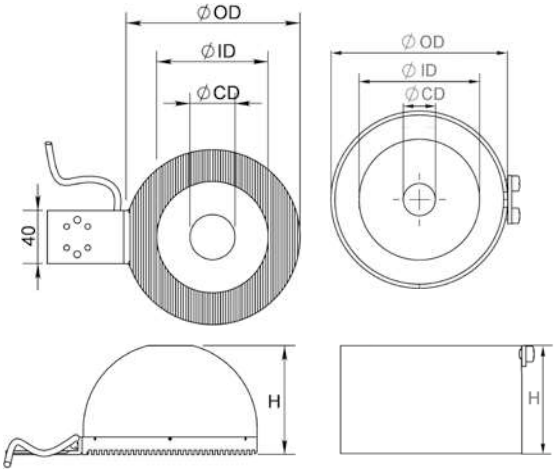

Step files available on request

Colour Information		
Replace "X" in order number by one character[1]	Colour	Wavelength (nm)
H	Red	617
W	White	
R	IR	850
B	Blue	469
G	Green	525
U	UV	395

[1] Example for red dome light: SAH3 2078

Order Information Single Colour Lights							Order Information RGB Lights		
Order number	Sizes (mm)				Controller		Order number	Controller[4]	
	Outer ø (OD)	Inner ø ((ID)	Camera hole ø (CD)	Height H	Continuous mode	Strobe mode		Continuous mode	Strobe mode
SAX3 2044	44	30	8	26	1A	8A			
SAX3 2078	78	34	24	57	1A	8A	RGB3 2078	1A	8A
SAX3 2102	102	54	30	69	1A	8A	RGB3 2102	1A	8A
SAX3 2132	132	84	34	83	1A 3A[2]	8A 24A[2]	RGB3 2132	1A	8A
SAX3 2162	162	114	50	100	1A 3A[2]	8A 24A[2]	RGB3 2162	1A	8A
SAX3 2202[3]	202	155	65	124	3A	24A	RGB3 2202[3]	1A	8A
SAX3 2348[3]	345	298	100	190	3A	24A	RGB3 2348[3]	On request	On request

[2] For light colours white, blue, green and UV.
[3] Second bracket (SXX3010213) included for more stability.
[4] For RGB lights 4 channel controllers is required.

Option
Cable length (1 meter included)

©2023 LMA Led Array Technology AB