Installation and User Guide

PAD2 2135/1 – Continuous mode LED Control Unit, single channel, 15W
External dimmer

Specifications	
Power supply	24V DC (±10%), 0.8A max
Light output	15W (1A max)*
Protection class	IP30
Operation temperature	0°C ...+55°C
Storage temperature	-40°C ...+80°C
Storage humidity	Max. 80%

*) Constant current drive.

Power/trig connections	DB9 Con.	
24V DC	Pin1, 2	(Yellow)*
0V	Pin3, 4	(Brown)*
Trigger+ **	Pin8	(Green)*
Trigger- **	Pin9	(White)*
Shield – do NOT connect!	Tied to 0V	

***) Optional pwr/trig cable, part no: LKA1 1081**

**) Trigger inputs for gated continuous mode.

Trigger input: optically isolated - see fig 3.
Range: 5-24V DC, max 20mA

Light connector:

Pull back the spring-loaded housing before connecting and disconnecting.



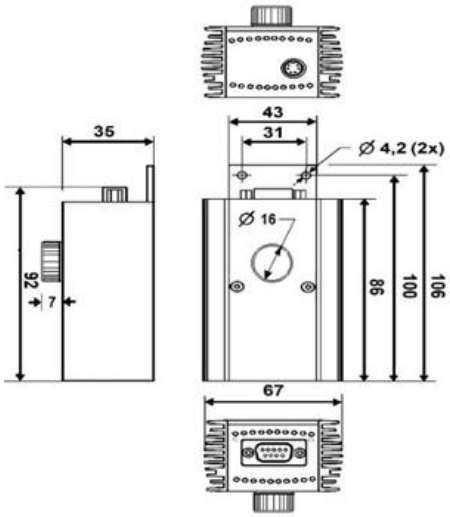

Mechanical dimensions

LED indication, Fig 1.



© 2022 LMA Led Array Technology AB

Installation and User Guide

Adjustable settings and modes – remove the units top cover (two Torx T10 screws) for access.

Feature	Description	Factory setting
Light intensity (LI)	0-100%	100%
Gated Continuous mode	Light On/Off control	GC mode: OFF
Double Intensity mode (DI)*	2 x dimmer setting	DI mode: OFF

*) Valid for light heads with max specified drive current up to 0.5 A as the max output current is 1 A.

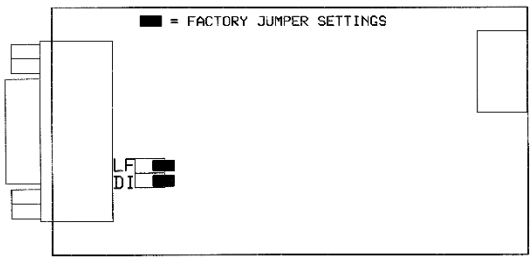

Fig 2.

Light Intensity – see Fig 2:
Lower the light intensity by turning dimmer knob anti-clockwise and vice versa. Range 0-100%.

Gated Continuous mode – see Fig 2 & 3:
Install the LF-jumper for remote on/off control of the light head output using e.g. a digital output of a PLC.
The light output state follows the trigger input state.

Double Intensity mode – see Fig 2 & 3:
When in gated continuous mode, it is possible to double the light intensity setting of the dimmer by installing the DI-jumper.
However, the maximum ON-time in this mode is five seconds after which the controller automatically turns OFF the light output for five seconds in order to prevent LED overheating.
This cooling state is indicated by flashing of the controller's power indicator LED - see Fig 1.

Fig 3.

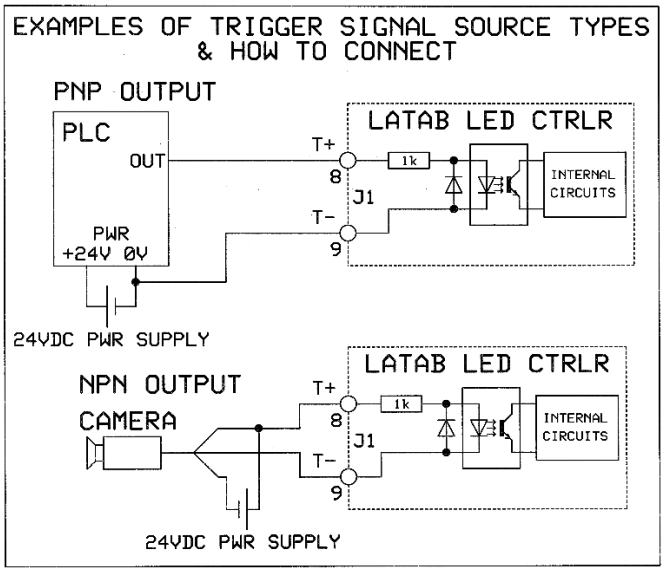

© 2022 LMA Led Array Technology AB