Installation and User Guide

PAD2 1235/3 – Continuous mode LED Control Unit, 2 channels, 3A

Specifications	
Voltage supply	24V DC (±10%), 4.2A max
Light outputs	2 x 45W (2 x 3A max)*
Protection class	IP30
Operation temperature	0°C ....+55 °C
Storage temperature	-40°C....+80 °C
Storage humidity	Max. 80%

*) Constant current drive.

Power/trigger connections	DB9	
24V DC	Pin 1, 2	(Red)*
0V	Pin 3, 4	(Black)*
Ch. 1 Trig+ **	Pin 6	(White)*
Ch. 1 Trig- **	Pin 7	(Brown)*
Ch. 2 Trig+ **	Pin 8	(White)*
Ch. 2 Trig- **	Pin 9	(Brown)*

***) Optional power/trig cable, part no: LKA1 1231**

**) Trigger inputs for gated continuous mode.

Trigger input: Optically isolated
Trigger range: 5-24V DC, 20mA

Light connector:

Pull back the spring-loaded housing before connecting and disconnecting.



Mechanical dimensions

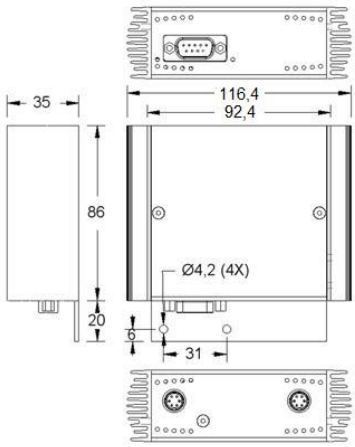

LED indication

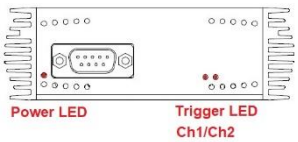

© 2022 LMA Led Array Technology AB

Installation and User Guide

Adjustable settings and modes:
(remove the units top cover, two Torx T10 screws, to access controls.)

Feature	Description	Factory setting
Light intensity (LI)	P1,2: 0-100%	100%
Gated Continuous mode	Light On/Off control	GC mode: OFF
Double Intensity mode (DI)*	2 x P1, 2 setting	DI mode: OFF

*) Valid for light heads with max specified drive current up to 1.5 A as the max output current is 3 A.

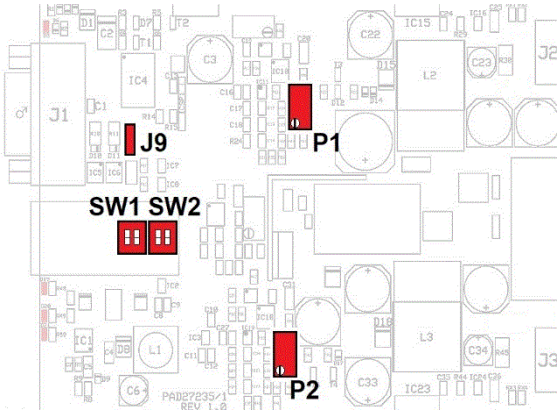

Light intensity P1-P2:
Turning P1 or P2 anti-clockwise will decrease the light intensity of the corresponding channel.

Trigger configuration:

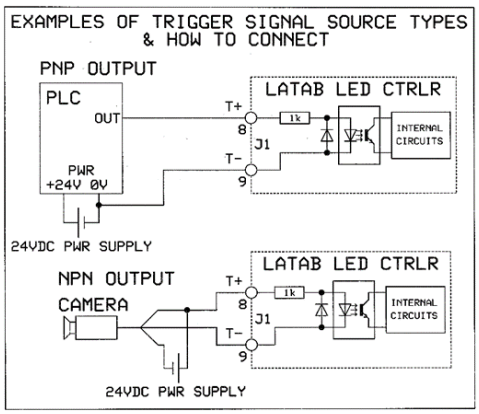

Gated Continuous mode:
Set SW1 to “on” (individual switches for each channel) for remote on/off control of the light head output using e.g. a digital output of a PLC.

The light output state follows the trigger input state.
Installing jumper J9 enables both channels to be triggered simultaneously using either one of the trigger inputs.

Double Intensity mode:
When in gated continuous mode, it is possible to double the light intensity settings of P1 and P2 by setting the appropriate switch of SW2 to “on”.
However, the maximum on-time in this mode is five seconds after which the controller automatically turns OFF the light output for five seconds in order to prevent LED overheating.

Mode setting SW1:
SW1 = ON = Normal steady state mode
SW1 = OFF = Gated continuous mode

Double intensity SW2:
SW2 = ON = doubles P1, P2 light intensity settings
SW2 = OFF = Normal intensity

© 2022 LMA Led Array Technology AB