High-brightness Rectangular Light

These rectangular lights are equipped with 12 high-power LEDs and a reflector to focus the light on a rectangular field of view. They are especially. suitable for pallet lighting.

Fastening holes are integrated in the cooling profile. (no bracket included)



Mechanical Dimensions

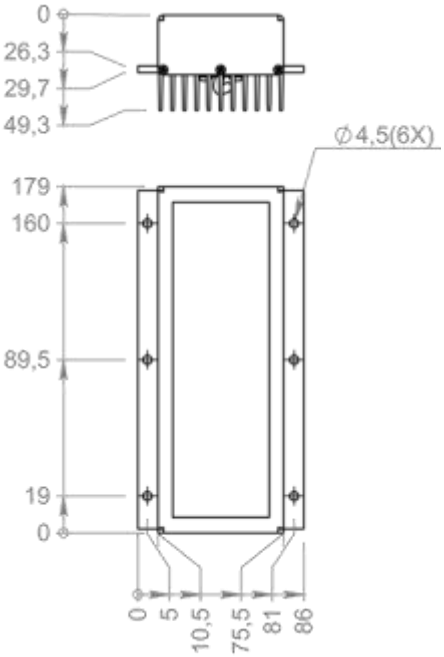

Step files available on request

Order Information			
Order number	Colour	Controller	
		continuous mode	strobe mode
OSH5 0101	Red (850nm)	3A	24A
OSW5 0101	White	3A	24A
OSB5 0101	Blue (470nm)	3A	24A
OSG5 0101	Green (505nm)	3A	24A

Order example with 5 m cable; OSH5 0101/5

Options

Cable length (1 meter included)

© 2023 LMA Led Array Technology AB