High-brightness Ring Lights

These ring lights are equipped with 12 high-power LEDs permitting working distances of 1 to 1.5 m, much more than standard LED lights which are usually suitable for working distances of up to 30 cm.

The lighting head can be equipped with lenses for light beam angles of 10, 18, 28 and 40 degrees for an ideal adjustment to different working distances and fields of views.

A bracket and a clear glass diffuser are included. It's possible to choose a shower glass diffuser.



Picture shows with extra bracket

Mechanical Dimensions

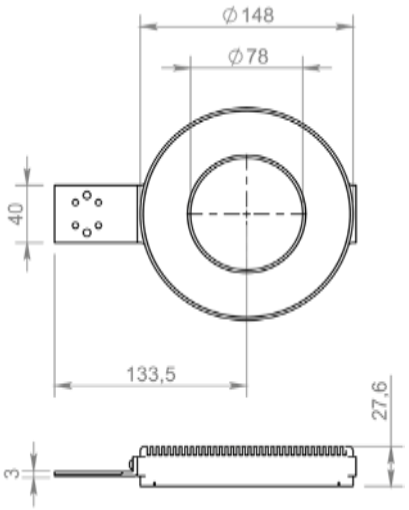

Step files available on request

Order Information			
Order number	Secondary optics	Controller	
		Continuous mode	Strobe mode
OSX3 1153(10)	10º	1A	8A
OSX3 1153(18)	18º	1A	8A
OSX3 1153(28)	28º	1A	8A
OSX3 1153(40)	40º	1A	8A

Old article number FAX3 1153

Colour Information		
Replace "X" in order number by one character[1]	Colour	Wavelength (nm)
H	Red	617
W	White	
B	Blue	470
G	Green	505
R	IR	850

[1] Example for red ring light: OSH3 1153(10)

Options

Cable length (1 meter included)
Bracket
Diffuser

© 2023 LMA Led Array Technology AB