High brightness Spotlight

The spotlight with secondary LED optics is based on an Oslon SSL80 LED. Different lenses enable fields of view with different diameters.



The lighting head can be equipped with lenses for light beam angles of 10, 18, 28 and 40 degrees for an ideal adjustment to different working distances and fields of view.

Mechanical Dimensions

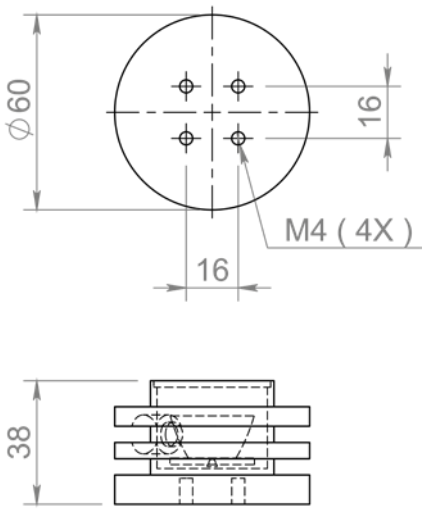

Step files available on request

Order Information			
Order number	Secondary optics	Controller	
		Continuous mode	Strobe mode
OSX3 1151(10)	10º	1A	8A
OSX3 1151(18)	18º	1A	8A
OSX3 1151(28)	28º	1A	8A
OSX3 1151(40)	40º	1A	8A

Old article number FAX3 1151

Options

Cable length (1 meter included)
Bracket
Diffuser

Colour Information		
Replace ”X” in order number by one character[1]	Colour	Wavelength (nm)
H	Red	617
W	White	
B	Blue	470
G	Green	505

[1]Example for red spotlight: OSH3 1151(10)

© 2023 LMA Led Array Technology AB